# **KWC** ZOE
## Lever mixer - Kitchen

**Modell-Linie: ZOE | 10.201.102.000FL ++**
Taps | Manual taps

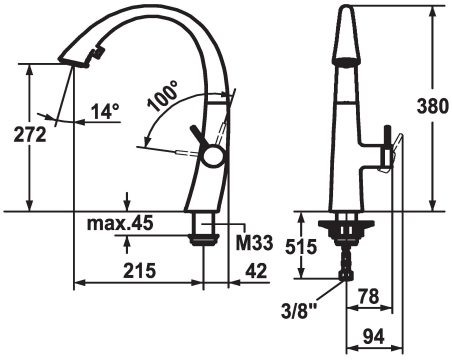


| KWC-No. |
|---|
| **10.201.102.000FL**<br>all chrome, A 215, flexible connection hoses |
| **10.201.102.127FL**<br>decor steel, A 215, flexible connection hoses |
| **10.201.102.150FL**<br>glacier white, A 215, flexible connection hoses |
| **10.201.102.176FL**<br>matt black, A 215, flexible connection hoses |
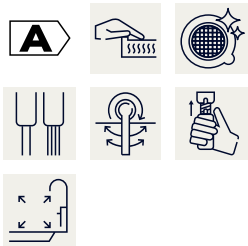
- Lever installation only possible on the right side
  - Child safety: cold water flow in lever position towards the front
- gap between wall and centre of mounting hole min. 42 mm
- TouchProtect - anti-scald protection thanks to the “double skin” principle
- Covered pull-out spray
  - ergonomic spout alignment, shape and handling
  - SprayClean - easy to clean and actively prevents limescale buildup
  - Neoperl® Cascade®
  - PowerClean - needle spray mode, with automatic diverter reset
  - up to 500 mm pull-out length
- SwivelStop - hose guide, swivelling 270°, limitable to 120°
- EasyLock - a pull-out spray that easily slides back into place
- OptimalSpace - ample space for washing or working
- KWC cartridge S 25
  - with ceramic discs
  - flow rate and temperature continuously variable
- Flexible connection hoses ⅜"
- Fastening by means of threaded sleeve M33 x 1.5
- Mounting hole size ø35 mm
- Flow rate normal spray 8 l/min (3 bar)
  Flow rate needle spray 9 l/min (3 bar)
  Acoustic group II