DELABIE | DVS

Round 305mm diameter rimmed edge inset wash basin

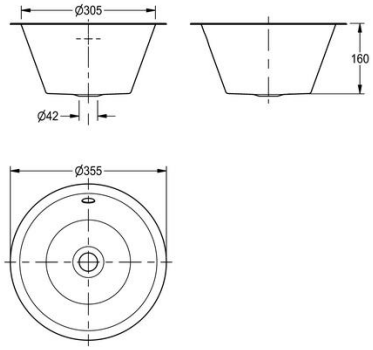

D20140N

Round 305mm diameter rimmed edge inset wash basin

This range of round inset sink bowls is manufactured from 1.2mm thick, grade 1.4301 (304) stainless steel, satin polish finish. All the bowls incorporate a rimmed edge for insetting into a worktop. All three bowls are prepared for a 32mm waste outlet. Waste fittings can be supplied as an extra. No tapholes are provided, any taps to be fitted must be mounted either through the worktop or wall mounted.

Supplied complete with fixing adhesive. NOTE: It may be necessary to notch the worktop when fitting an overflow.

Technical data

Bowl - bowl depth	160mm
Bowl finish	Satin finished
Bowl depth	305mm
Bowl shape	Circle
Gross weight	1.8kg
Material	Stainless steel
Material code	1.4301 Chrome nickel steel V2A
Material thickness	1.2mm
Overall height	160mm
Overall width	355mm
Overflow	Yes
Rear upstand	No
Splash back	No
Surface finish	Satin finished
Tap ledge	No
Type of mounting	Inset mounting
Waste hole position	Centre
Waste size	DN 32
Net weight	1.2kg