DELABIE | DVS

WC flushvalve kit

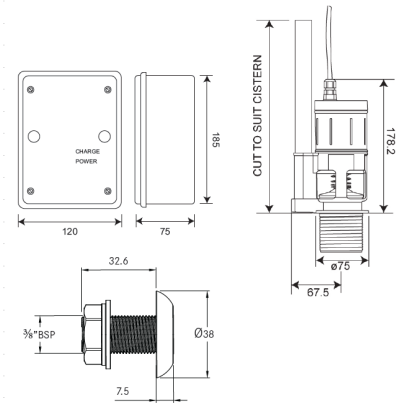

WC03-003
WC flushvalve kit

No-touch WC flushing system is an electronically operated drop valve which replaces the traditional syphon and delivers a WRAS Approved 4L single flush from the cistern to the lavatory bowl.

Technical data - Flushvalve	
Weight	1.05kg
Material	ABS plastic
Power supply	Through WC control box
Fixing size	Ø2"
Internal overflow	Yes
Type of operation	Sensor operation
Type of mounting	WC flushvalve
Functional principle	Electronic self closing
Failsafe close	Yes

Technical data - Control box	
Weight	1kg
Material	ABS plastic
Run times	0.25 - 6.75 seconds
Power source	230V a.c.
IP rating	54
Amps	0.07A (MAX)
Frequency	50Hz
Voltage	230V a.c.

Technical data - Wave on sensor	
Material	Chromed brass
Surface finish	Polished
Gross weight	0.2kg
Overall dimensions	40.1mm (L) x Ø38mm
Thread diameter	Ø16.66mm (3/8"BSP)
Type of mounting	Wall mounted (Ø18mm drill hole required)
Operation type	A.I.R (Active infrared) touch-free
Cable length	3m
Adjustable settings	Dictated by control box or programmable sensor & remote